Change Order Process
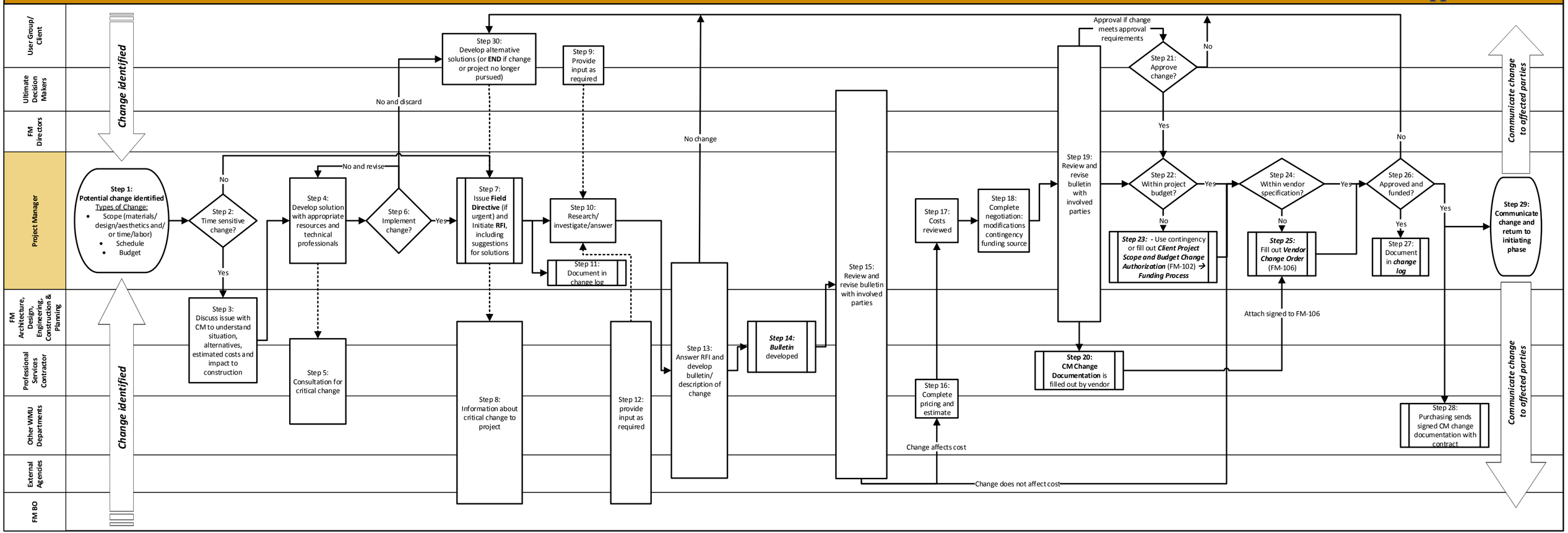
Western Michigan University